Axion 2 LRF

Manual

Content

About the device

- Description
- Package Contents
- Features
- Components and Controls

Power supply

- Battery Charging
- Battery Installation
- External Power Supply
- Precautions
- Recommendations for Use

Getting Started

- Powering on and Image Setting
- Button Operation

Interface

- Status Bar
- Quick Menu
- Main Menu
  - Enter the Main Menu
  - Color Modes
  - Smoothing Filter
  - User Mode
  - Icon Brightness
  - PiP Mode
  - Wi-Fi Activation
  - Wi-Fi Settings
  - Microphone
  - Rangefinder
  - Calibration Mode
  - General Settings
  - Defective Pixel Repair

Defective Pixel Repair
Restore Default Pixel Map
Device Information

Functions

Amplification Level
Video Recording and Photography
Laser Rangefinder
Discrete Digital Zoom
PiP Function
Display-Off Function
Wi-Fi Function
Installing the Device on a Tripod
USB Connection

Software

Stream Vision 2
Firmware Update

Maintenance

Technical Inspection
Technical Maintenance and Storage

Troubleshooting
Specifications
Legal Compliances and Disclaimers

Description

Axion 2 LRFthermal imaging monoculars are designed for use both at night-time and during the day and provide exceptional image quality even in adverse weather conditions (fog, smog, rain) and beyond obstacles like branches, tall grass, dense foliage, etc. known to hinder target detection.

Unlike night-vision devices based on electron-optical converters, thermal imaging devices do not need an external light source and are resistant to bright light.

Axion 2 LRF thermal imagers are designed for various applications including hunting, observation, security, terrain orientation, search and rescue operations, etc.

Axion 2 LRF thermal imagers are equipped with a built-in laser rangefinder with a range of up to 1000 m and a measurement accuracy of ± 1 m.

To get started, see the sections:

Battery Charging

Battery Installation

Powering on and Image Setting

Laser Rangefinder

Package Contents

- Axion 2 LRF thermal monocular
- APS 5 rechargeable battery
- 2 battery-locking covers
- Power adapter
- USB Type-C cable
- Carrying case
- Hand strap
- Quick reference user manual
- Lens cleaning cloth
- Warranty information
- Tripod adapter

Features

- Compact and lightweight
- Functional and ergonomic design
- 8-color display palette
- 3 calibration modes: Manual, Semi-Automatic, Automatic
- Detection range up to 1300 m/1422 yds
- Smooth digital zoom 2-8x
- Three levels of sensitivity enhancement: Normal, High, Ultra
- Integrated laser rangefinder
- Display-Off function
- Defective pixel repair
- Updatable firmware
- Wide operating temperature range (-25°C to +40°C / -13°F to +104°F)
- Fully waterproof (IPX7 rated)
- Tripod mount

Video/Audio Recording

- Built-in video and sound recorder
- Integration with iOS and Android devices
- Wi-Fi remote control and viewing using a smartphone
- Storing photos and videos in Cloud when using the Stream Vision 2 App

Battery Pack

- Quick Change Li-Ion Battery Pack APS 5
- Charging from USB Power Bank
- Quick-Charge power delivery

Components and Controls

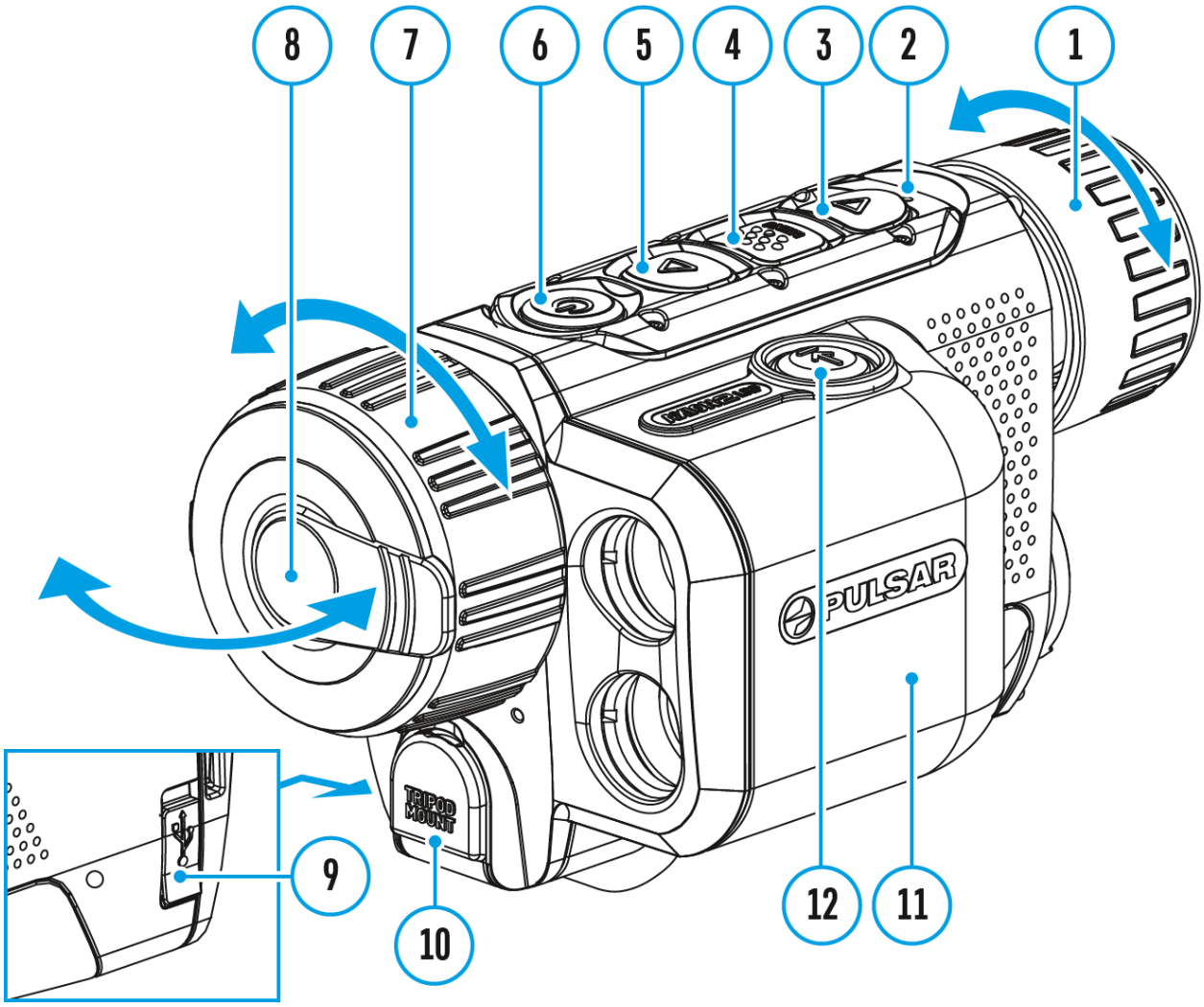

1. Eyepiece focus ring
2. LED indicator
3. DOWN/REC button
4. MENU button
5. UP/ZOOM button
6. Power ON/OFF/CALIBRATION button
7. Lens focus ring
8. Lens cover
9. Tripod adapter socket
10. USB Type-C connector

11. Laser rangefinder
12. LRF button

LED indicator **(2)** displays the current status of the device:

LED Indicator	Operating Mode
🟢	Device is turned on
🟢	The device is turned on/video recording
🔴	The device is turned on/battery charge < 10%
🔴	The device is turned on/video recording/battery charge < 10%

Battery Charging

The **Axion 2 LRF**thermal imager comes with an APS 5 rechargeable Lithium-ion battery. APS 5 batteries support USB Power Delivery fast charging technology when using a standard charging set (charger*, USB Type-C cable, power adapter). Before first use, make sure the battery is fully charged.

Option 1

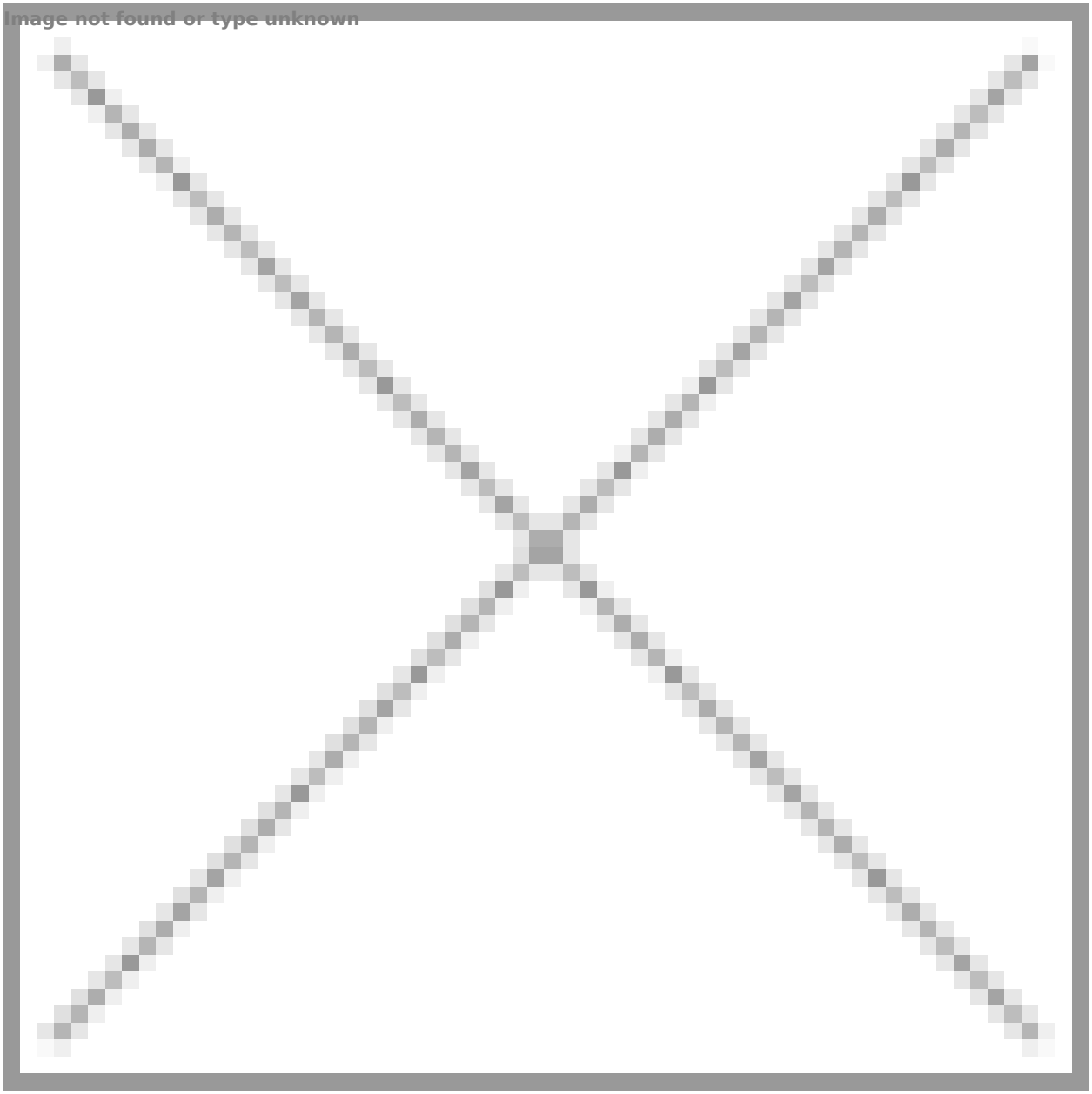
Image not found or type unknown

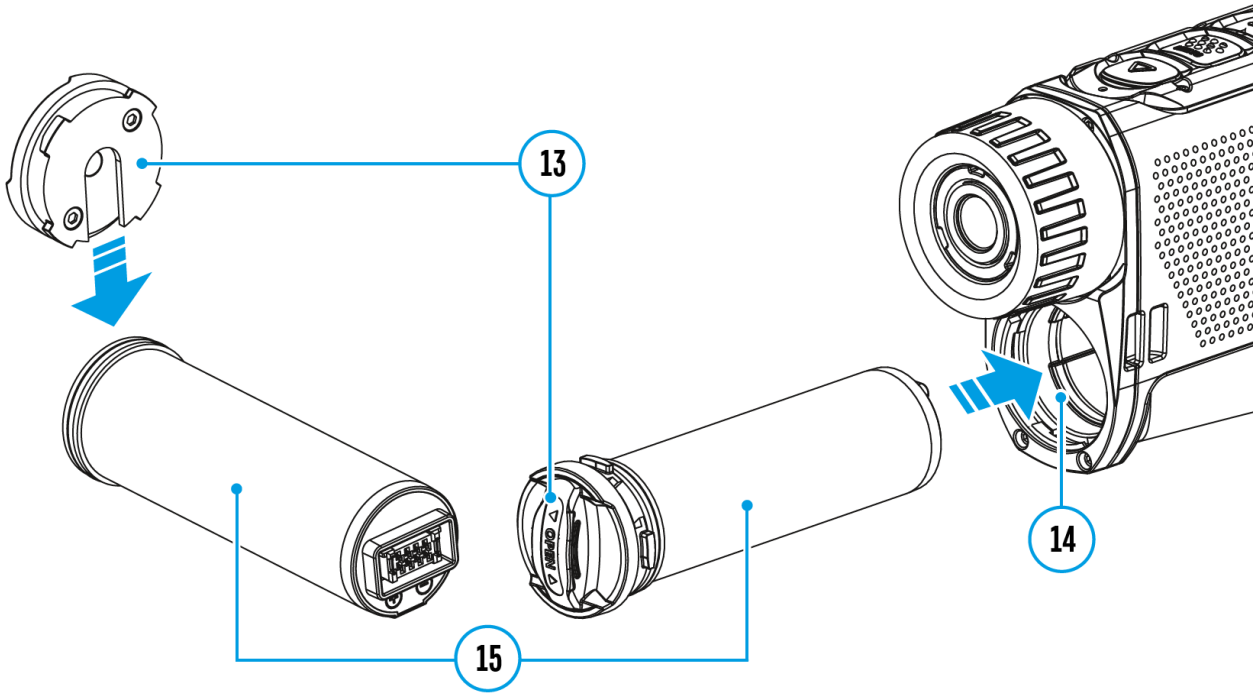
13
14
15

Image not found or type unknown

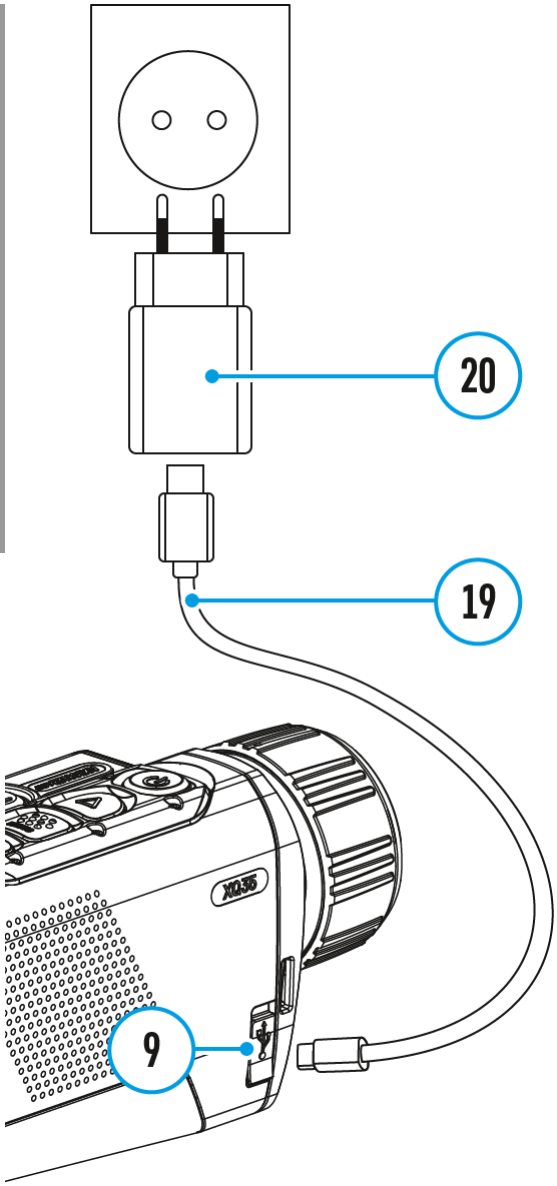

1. **Install** the APS 5 battery **(15)** in the battery compartment **(14)** of the device.
2. Connect the USB cable **(19)** to the USB Type-C connector **(9)** of the device.
3. Connect the other end of the USB cable **(19)** to the Power Adapter **(20).**
4. Plug the Power Adapter **(20)** into a 100-240 V socket**.**
5. Wait until the battery is fully charged (indication in the status bar: Image not found or type unknown).

Option 2

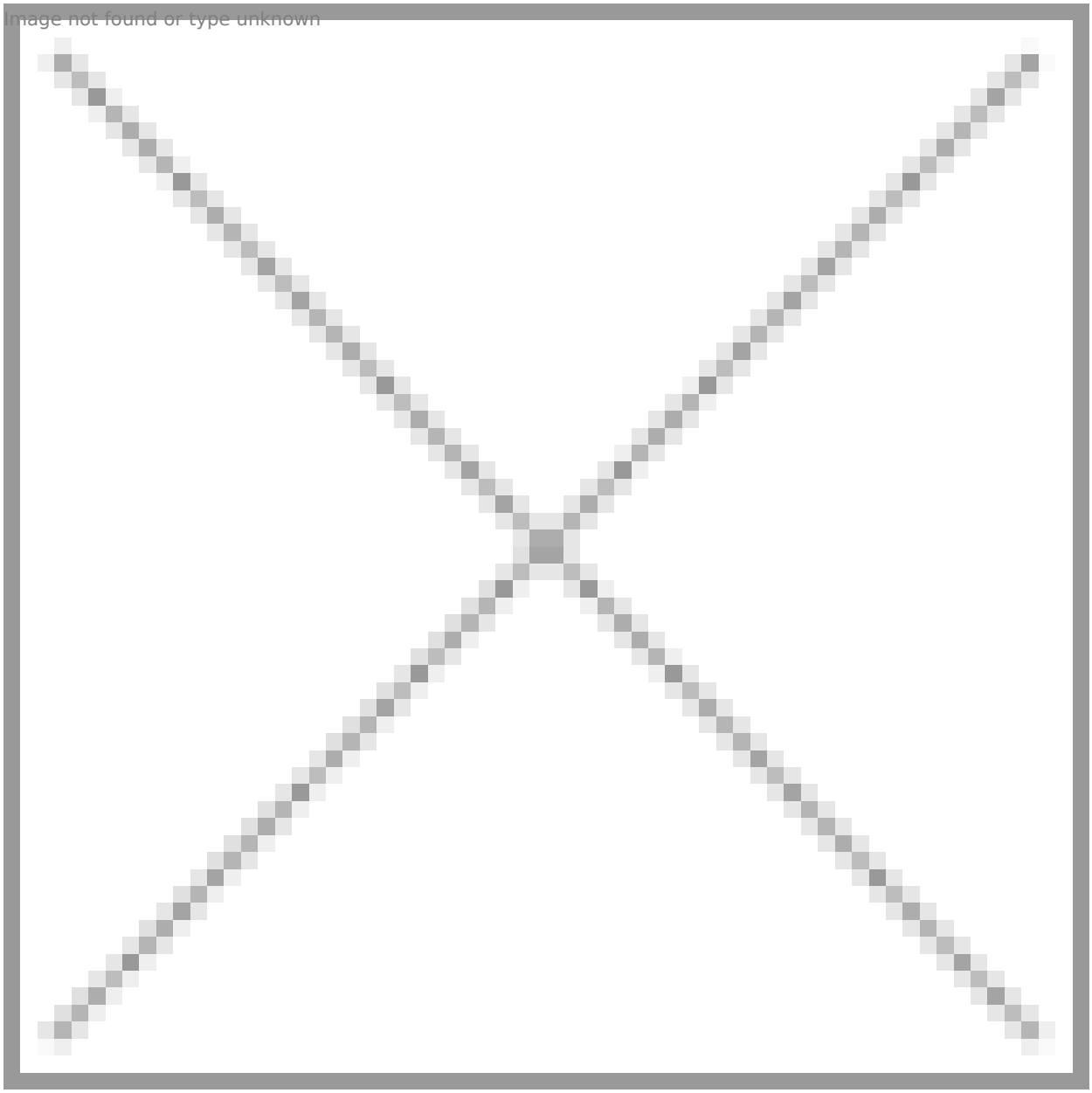
Image not found or type unknown

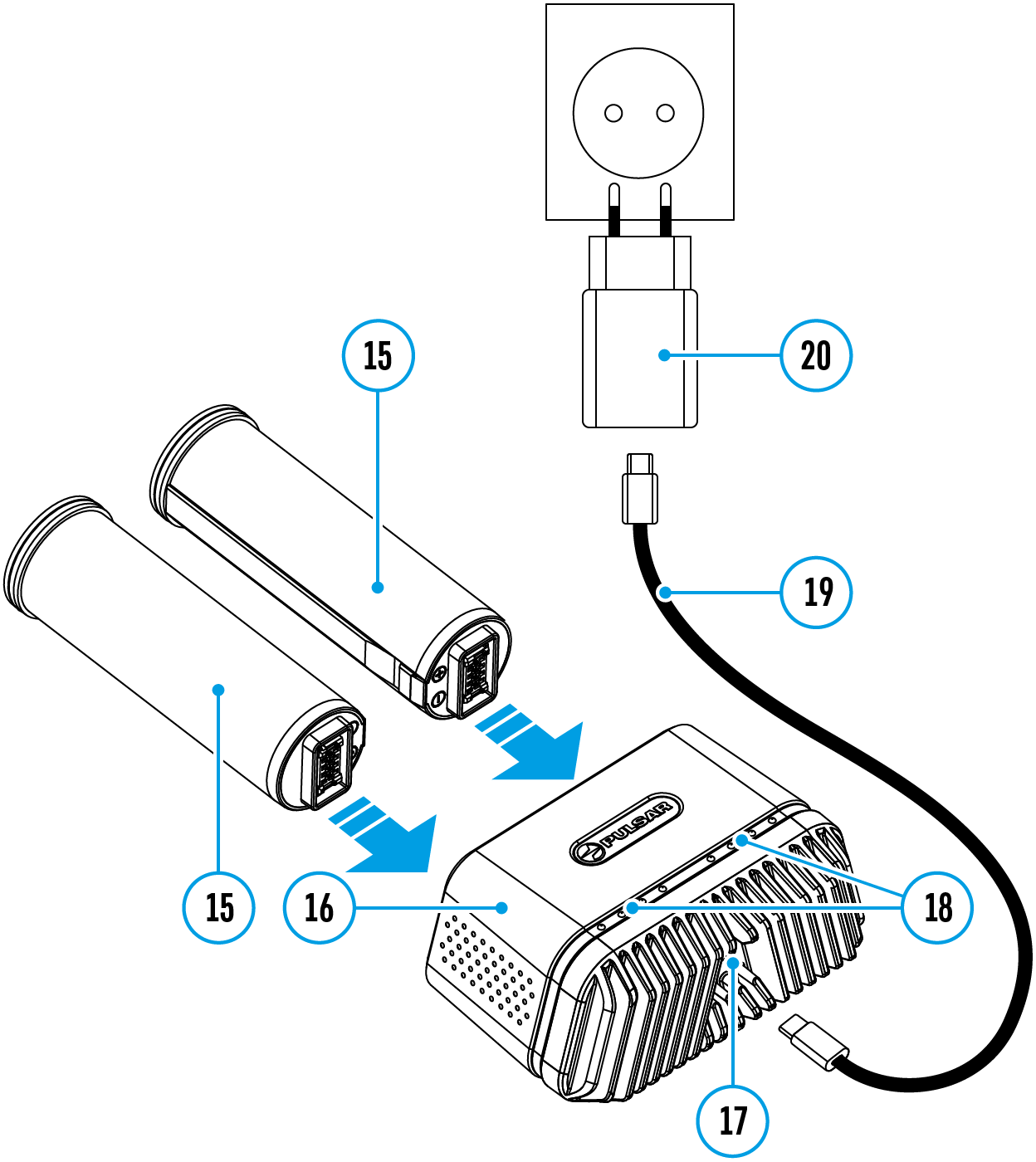

1. Insert the APS 5 battery **(15)** along the guide into the APS 5 charger* **(16)** slot as far as it will go.
2. Connect the plug of the USB Type-C cable **(19)** to the USB Type-C connector of the Power Adapter**(20).**
3. Plug the Power Adapter **(20)** into a 100-240 V socket**.**
4. Connect the other end of the USB Type-C cable **(19)** to the USB Type-C connector **(17)**of the charger.
5. LED indicators **(18)** will display the battery charge level (see Table).

6. Wait until the battery is fully charged (LED indication **(18)**: ● ● ● ●).

Note: Two batteries can be charged at the same time, a second slot is provided for it.

LED indication (18) in the battery charging mode	Battery Level
●	Battery charge level is from 0% to 25%
● ●	Battery charge level is from 26% to 50%
● ● ●	Battery charge level is from 51% to 80%
● ● ● ●	Battery charge level is from 81% to 99%
● ● ● ●	Battery is fully charged. It can be disconnected from the charger.
●	Defective battery. **Do not use the battery!**

LED indication (18) in the standby mode**	Battery Level
●	Battery charge level is from 0% to 25%
●	Battery charge level is from 26% to 50%
● ●	Battery charge level is from 51% to 80%
● ● ●	Battery charge level is from 81% to 99%

• • • •	Battery is fully charged. It can be disconnected from the charger.
•	Defective battery. **Do not use the battery!**

* Available separately

** Standby mode is when the batteries are in the charger but the Power Adapter is not connected. In this mode, the indicators are only on for 10 seconds.

Attention! When using a Power Adapter that does not support USB Power Delivery fast charging technology, the flicker frequency of the LED indicators decreases by a factor of 3 and the charge time increases.

Attention! The charger heats up during fast charging. Excess heat is removed through the radiator and does not affect the device operation.

Battery Installation

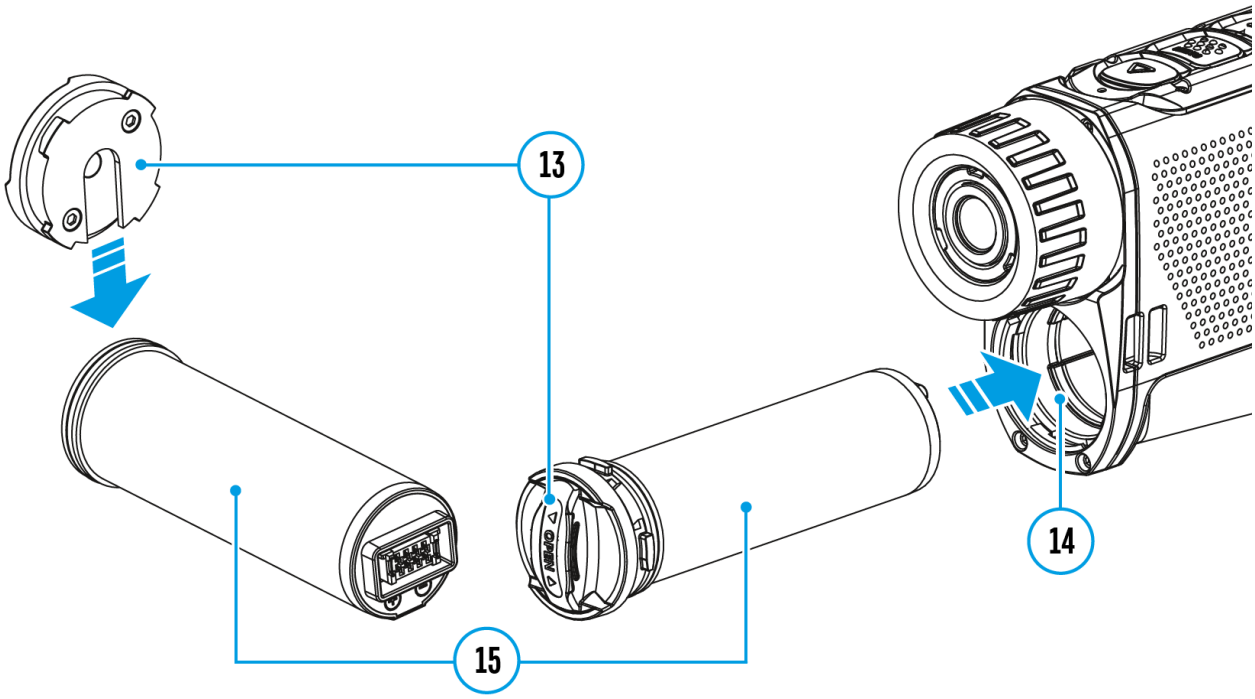

1. Put the Lock-cover **(13)** on the rechargeable APS 5 battery **(15).**
2. Insert the APS 5 battery **(15)** along the guide into the battery compartment **(14).**
3. Lock the battery **(15)** by turning the Lock-cover **(13)**clockwise until it stops.
4. Turn the Lock-cover **(13)** counter-clockwise to remove the battery **(15).**

External Power Supply

Show device diagram

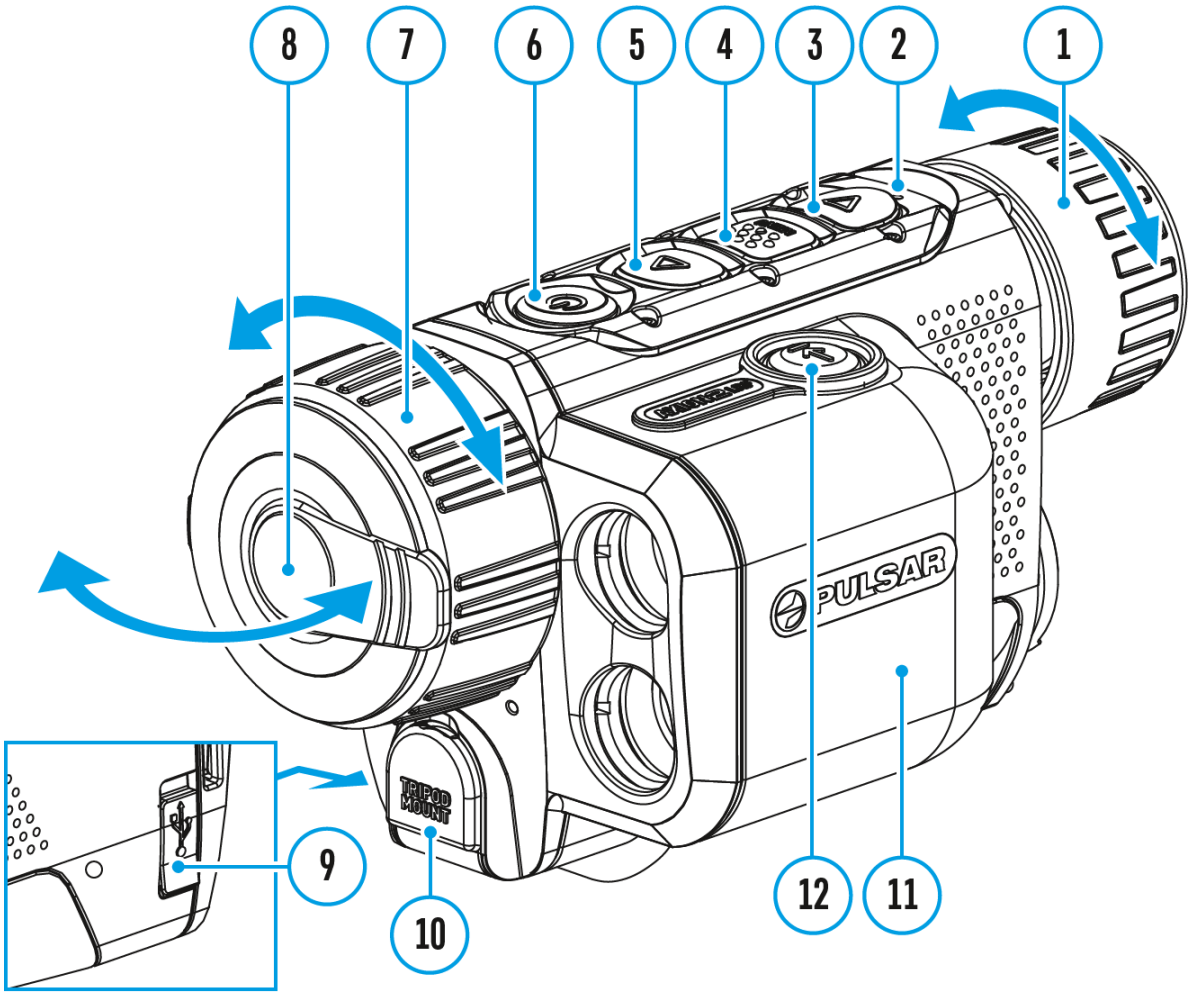

External power can be supplied from an external source, such as a Power Bank (5 V, 9 V).

1. Connect the external power source to the USB Type-C connector **(9)** on the device.
2. The device will switch to draw power from the external source while the APS5 battery is gradually recharged.
3. A battery icon will appear on the display showing the percentage-charged level.
4. An icon will be displayed when the device is powered by an

external power source and the APS5 battery is not connected.

5. The device automatically switches to the APS 5 battery when the external power supply is disconnected.

Attention! Charging APS 5 batteries from an external source at temperatures below 0°C (<32°F) can reduce battery life. When using external power, connect the power bank to the device only after it has been turned on and working (warming) for at least several minutes.

Precautions

- Always use the APS 5 charger (purchased separately) to charge APS 5 batteries. Using an unsuitable charger can cause irreparable damage to the battery and fire.
- Do not charge the battery immediately after exposure to a cold environment. Let the battery warm for at least 30 minutes before charging.
- Do not leave the battery unattended while charging.
- Do not use the charger if it has been modified or damaged.
- Do not leave the battery in a plugged-in charger after charging is complete.
- Do not expose the battery to high temperatures or open flames.
- Do not use the battery as a power source for devices that do not support APS 5 batteries.
- Do not disassemble or deform the battery or charger.
- Do not drop or strike the battery or charger.
- Protect the battery and charger from water and moisture.
- Keep the battery out of the reach of children.

Recommendations for Use

- The batteries should be partially charged (50 to 80 %) for long-term storage.
- Charge at an ambient temperature of 0°C to +35°C (32°F to 95°F) or the lifespan of the battery will decrease significantly.
- Using the battery at sub 0°C (<32°F) ambient temperature decreases battery capacity. This is normal and not a defect.
- Using the battery at temperatures outside the range of -25°C to +40°C (-13°F to 104°F) may reduce battery life.
- The battery is short-circuit protected. Any situation that may cause short-circuiting should be avoided.

Powering on and Image Setting

Show device diagram

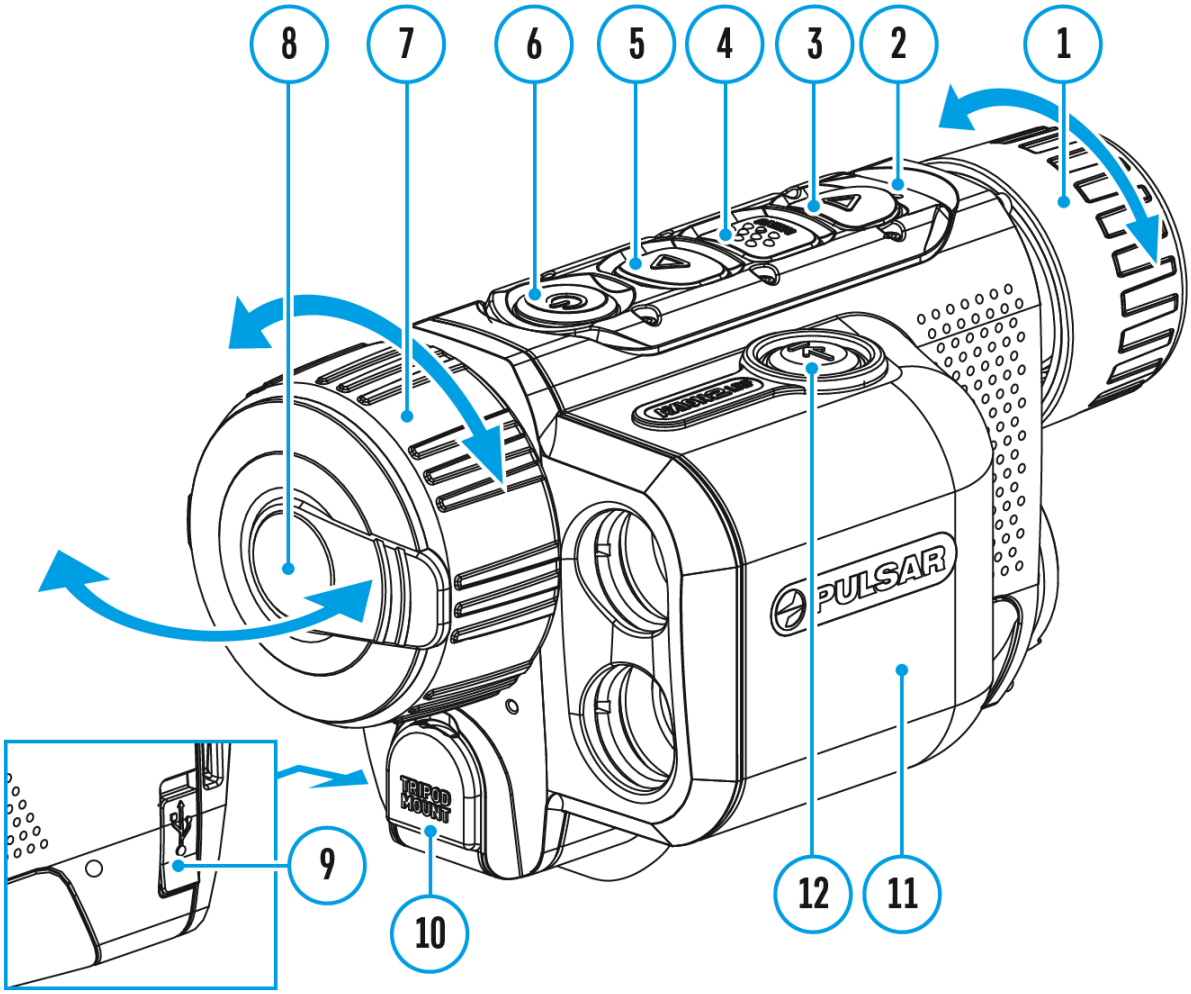

---

1. Open the lens cover **(8)**. The lens cover can be secured to the strap using the built-in magnet.
2. Press the **ON/OFF (6)**button briefly to turn on the device.
3. Adjust the eyepiece focus ring **(1)** of the device until the symbols on the display are sharp.
4. Rotate the lens focus ring **(7)** to focus on the object being observed.
5. Enter the main menu with a long press of the **MENU (4)** button and

select the desired **calibration mode**: Manual **(M)**, Semi-Automatic **(SA)** or Automatic **(A)**.

6. Calibrate the image by briefly pressing the **ON/OFF (6)**button**.**If the **SA** or **A** calibration mode has been selected the microbolometer is closed with an internal shutter automatically. However, if the **M** calibration mode has been selected you must close the lens cover before calibrating manually.
7. Select the required **amplification level** (**“Normal” N, “High” H, “Ultra” U**) by briefly pressing the **UP (5)** button.
8. Enter the main menu with a long press of the **MENU (4)** button and select the desired color palette (for more details see the **Colour Modes** section).
9. Activate the quick menu by briefly pressing the **MENU (4)** button to adjust the brightness, contrast and smooth digital zoom (for more details see the **Quick Menu** section).
10. After use, turn the device off by a long press of the **ON/OFF (6).**

Warning! Never point the lens at intensive energy sources such as laser radiation emitting devices or the sun. It can damage electronic components in the device. The warranty does not cover damage arising from failure to comply with operating instructions.

Button Operation

Operation	Button
Power device on	⏻ short press
Power device off	⏻ long press for 3 secs
Turn display off	⏻ long press for less than 3 secs
Turn display on	⏻ short press
Calibrate the microbolometer	⏻ short press
Switching amplification levels	△ short press
Control discrete digital zoom	△ long press
Laser Rangefinder	**Button**
Turn on rangefinder	→| short press
Single distance measurement	→| short press
Activate rangefinder scan mode	→| long press
Deactivate rangefinder scan mode	→| short press
Turn off rangefinder	→| long press
Main Menu	**Button**
Enter main menu	MENU long press
Navigation upwards/rightwards	△ short press
Navigation downwards/leftwards	▽ short press
Confirm selection	MENU short press
Exit submenu without confirming selection	MENU long press

Exit menu (switch to viewing mode)	MENU long press

Quick Menu	Button
Enter quick menu	MENU short press
Switch between quick menu options	MENU short press
Increase value	△ short press
Decrease value	▽ short press
Exit quick menu	MENU long press

Status Bar

The status bar at the bottom of the display shows current operating statuses via icons, including:

- Color Mode (shown only when the Black Hot color mode is selected)
- Amplification level
- Smoothing Filter (displayed when the function is on)
- Calibration Mode (in Automatic calibration mode a countdown timer 00:03 will appear instead of the calibration mode icon 3 seconds before automatic calibration begins).
- Microphone
- Magnification
- Wi-Fi Connection
- Time
- Power Indication:

- charge level if the device is powered by a battery

- charge level if the device is charging and powered by a battery

- no battery, the device is connected to an external power supply

Quick Menu

Show device diagram

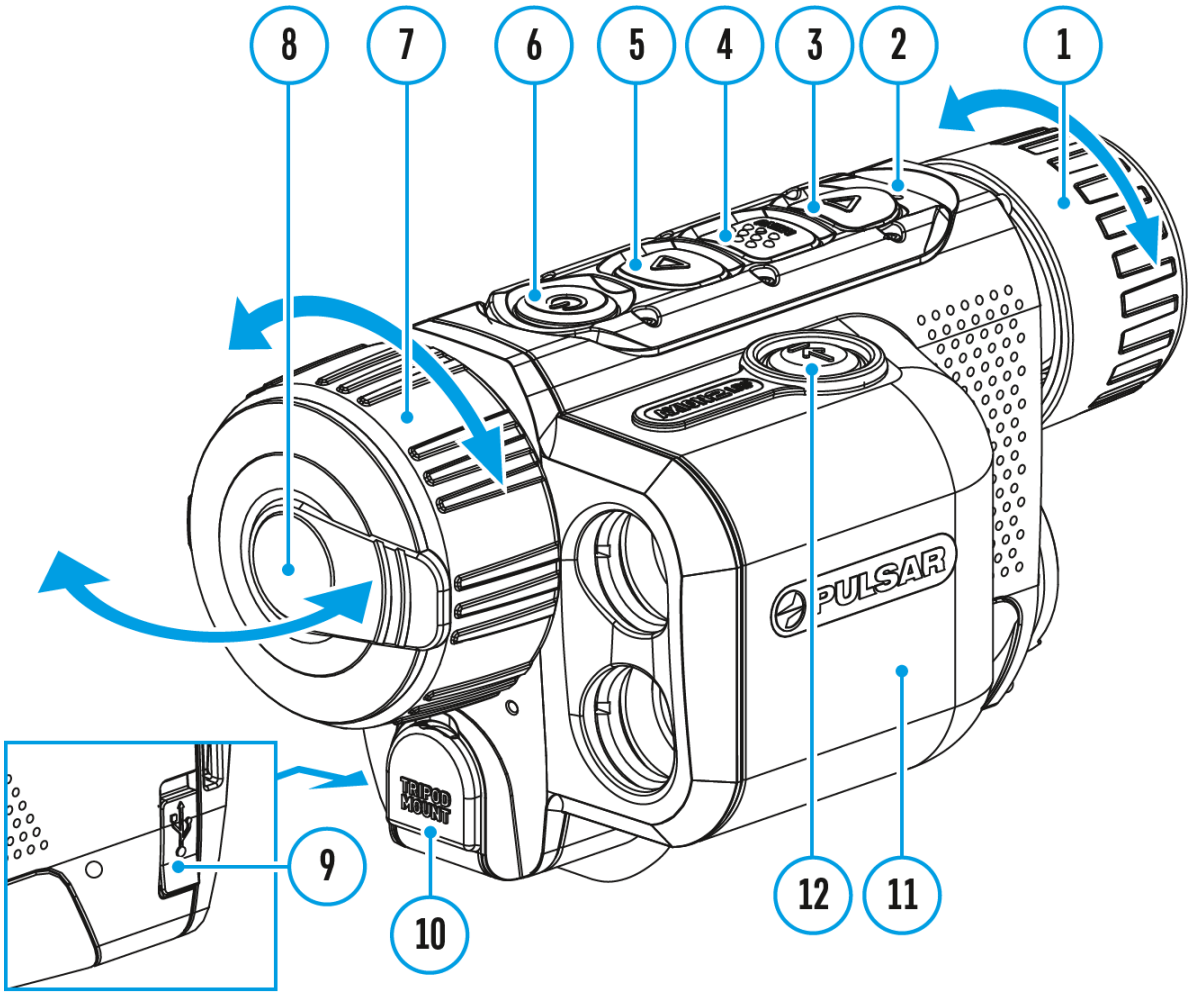

The basic settings (adjusting brightness and contrast) can be changed using the quick access menu.

- Enter the menu by briefly pressing the **MENU (4).**
- A short press of the **MENU (4)** button enables you to toggle between functions, as described below.

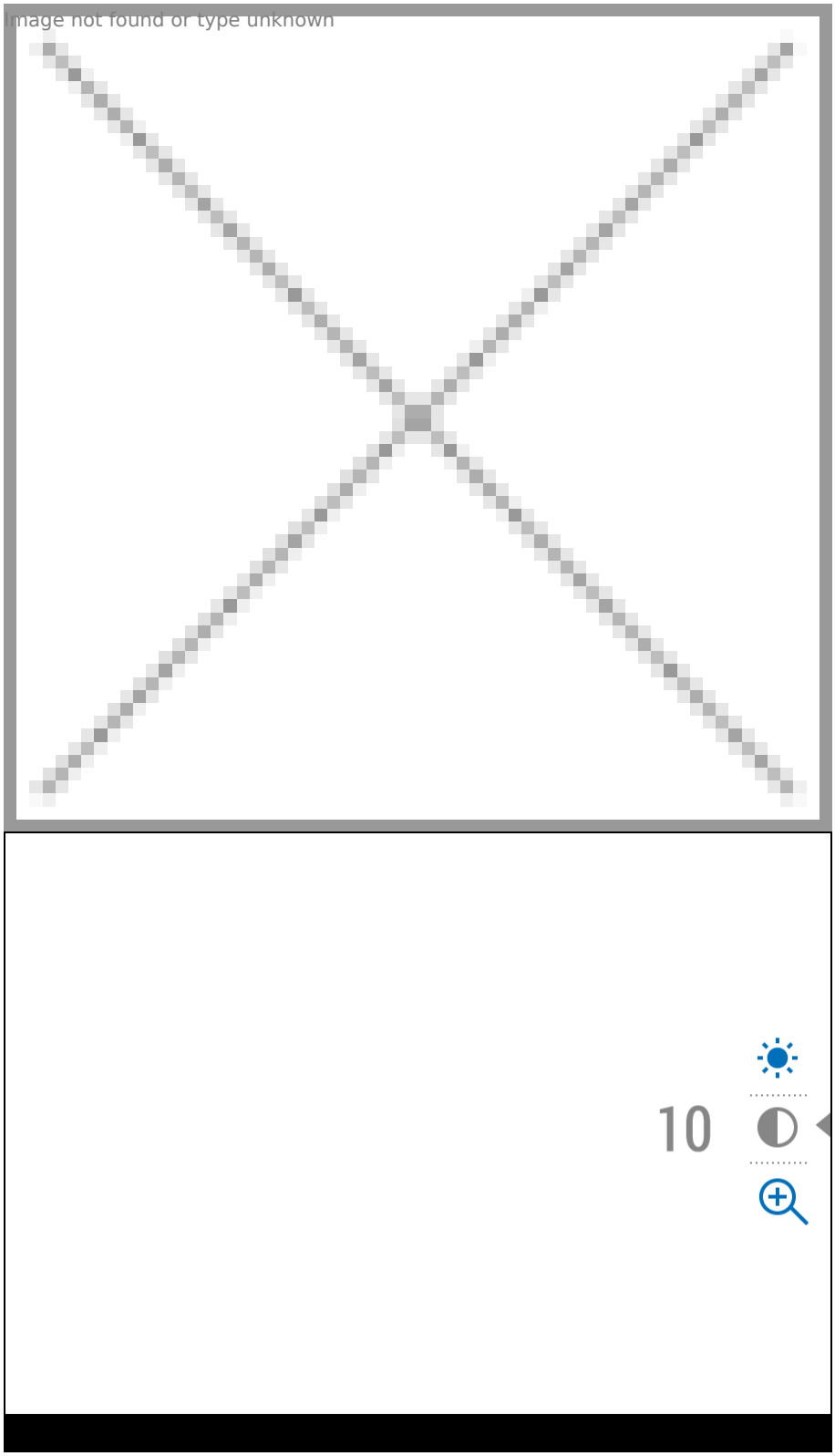

Brightness ☀ – press the **UP (5)/DOWN (3)** buttons to change display brightness from 0 to 20.

Contrast ◐ – press the **UP (5)/DOWN (3)** buttons to change image contrast from 0 to 20.

*Note:*display brightness and contrast settings are saved in the memory when the device is turned off.

Smooth Digital Zoom – press the **UP (5)/DOWN (3)** button to change the value of the digital zoom from 2 to 8. The digital zoom changes in 0.1 increments.

- Press and hold the **MENU (4)** button to exit the menu or wait for 10 seconds to exit automatically.

Amplification Level

Show device diagram

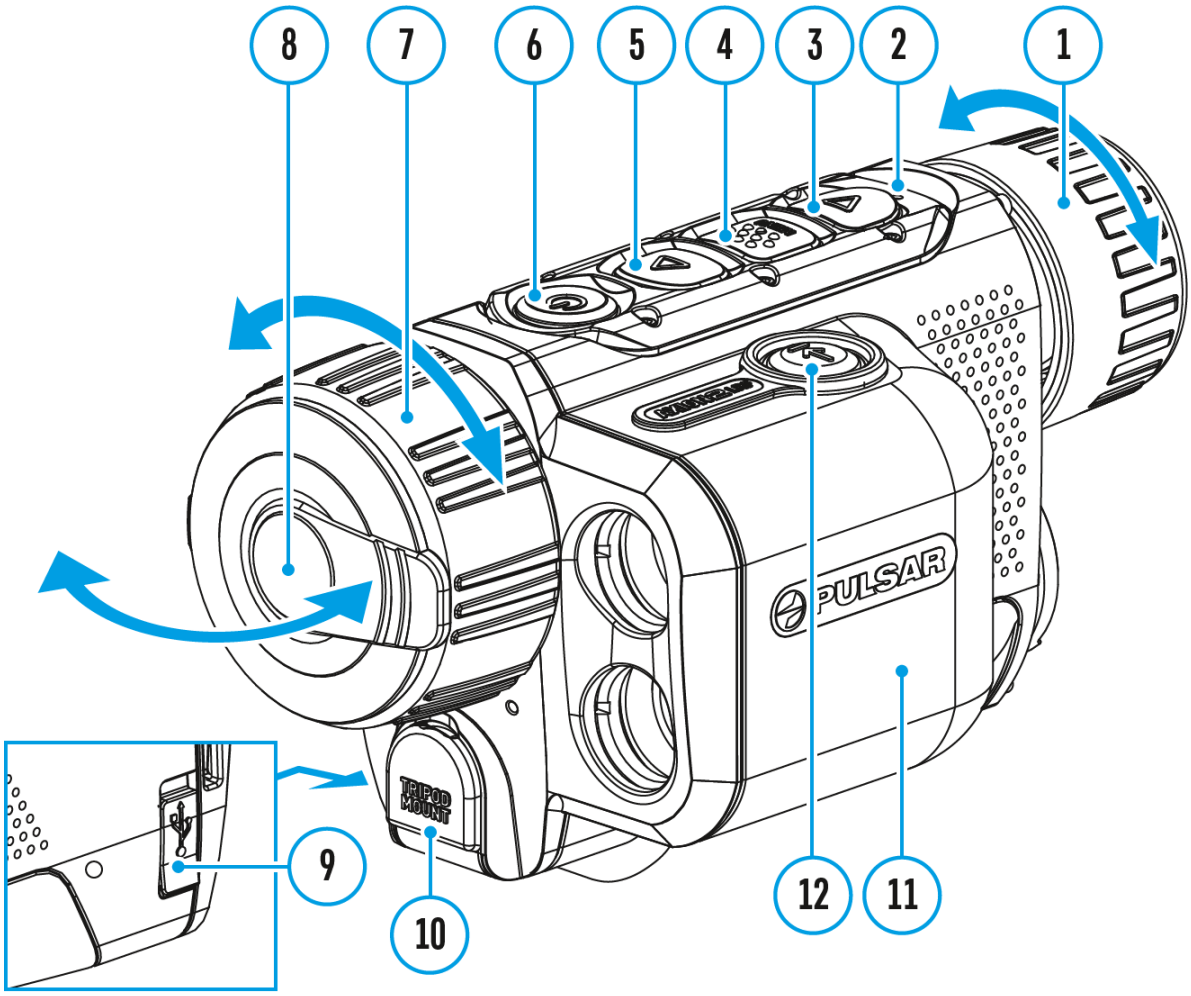

Sensitivity enhancement levels (Normal N, High H, Ultra U) are software algorithms that enhance the quality of detection and recognition in various observation conditions. When the temperature contrast decreases (fog, precipitation, high humidity), it is recommended to increase the amplification level. To optimize the image, activate the **Smoothing Filter** in the main menu.

Press the **UP**button **(5)** briefly to switch the amplification level.

Video Recording and Photography

Show device diagram

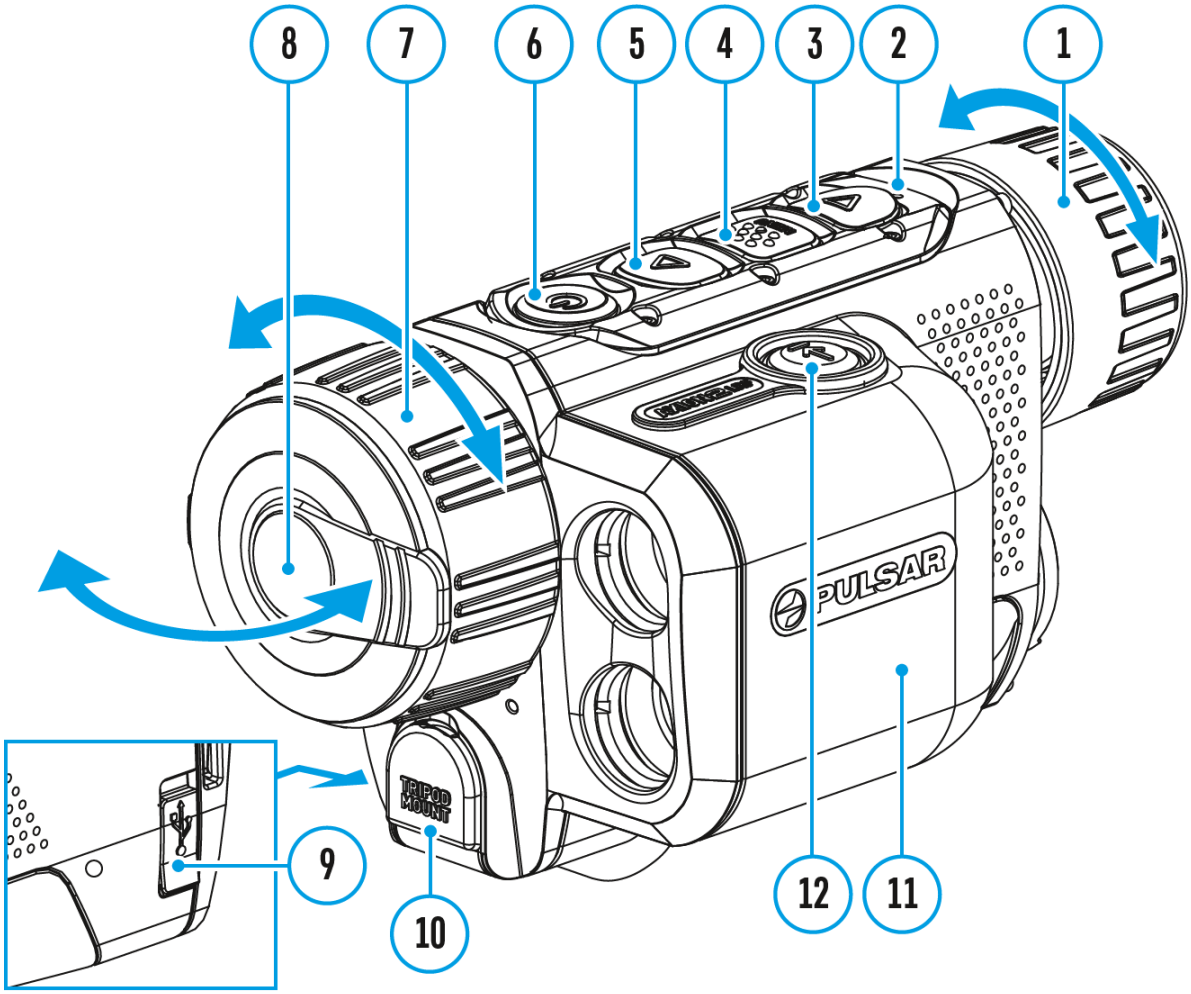

Axion 2 LRFthermal imagers feature video recording and photography of the image being observed to the internal memory card.

Before using this feature please set the **date** and **time** (see **General Settings** section).

The built-in recorder operates in two modes **– Video** and **Photo.**

Video mode. Video recording

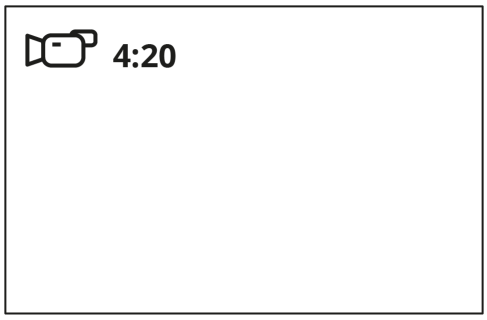

1. Switch to **Video** mode by pressing and holding the **DOWN/REC (3)** button.

2. The icon and the remaining recording time in HH:MM (Hours:Minutes) format are displayed in the upper left corner, for example 4:20.

3. Press the **DOWN/REC (3)** button briefly to start video recording.

4. When the video recording starts, the icon will disappear and the REC icon and timer in MM:SS (Minutes:Seconds) format will appear ●REC | 00:25.

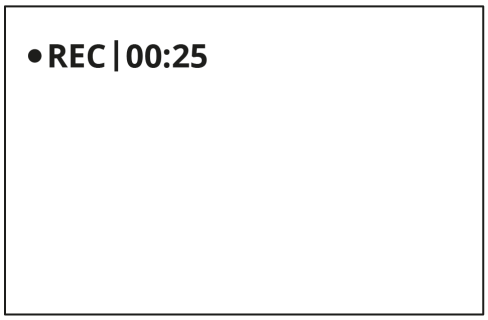

5. Pause and resume recording video with a short press of the **DOWN/REC (3)** button.

6. Stop recording video with a long press of the **DOWN/REC (3)**button.

7. Video files are saved to the built-in memory card after the video recording has been stopped.

8. Press and hold the**DOWN/REC (3)** button to switch between the **Video** and **Photo**modes (Video-> Photo-> Video…)

Photo Mode. Capturing an image

1. Switch to the **Photo**mode by pressing and holding the **DOWN/REC (3)** button.

2. Press the **DOWN/REC (3)** button briefly to take a photo. The icon flashes – the photo file is being saved to the built-in SD card.

Notes:

- You can enter and operate the menu during video recording.
- Recorded videos and photos are saved to the internal memory card in the format img_xxx.jpg (photos), video_xxx.mp4 (videos).
- The maximum duration of a recorded file is five minutes. After this time expires, a video is recorded into a new file. The number of recorded files is limited by the capacity of the device's internal memory.
- Regularly check the free capacity of the internal memory and move recorded footage to other storage media to free up space on the internal memory card.

Laser Rangefinder

Show device diagram

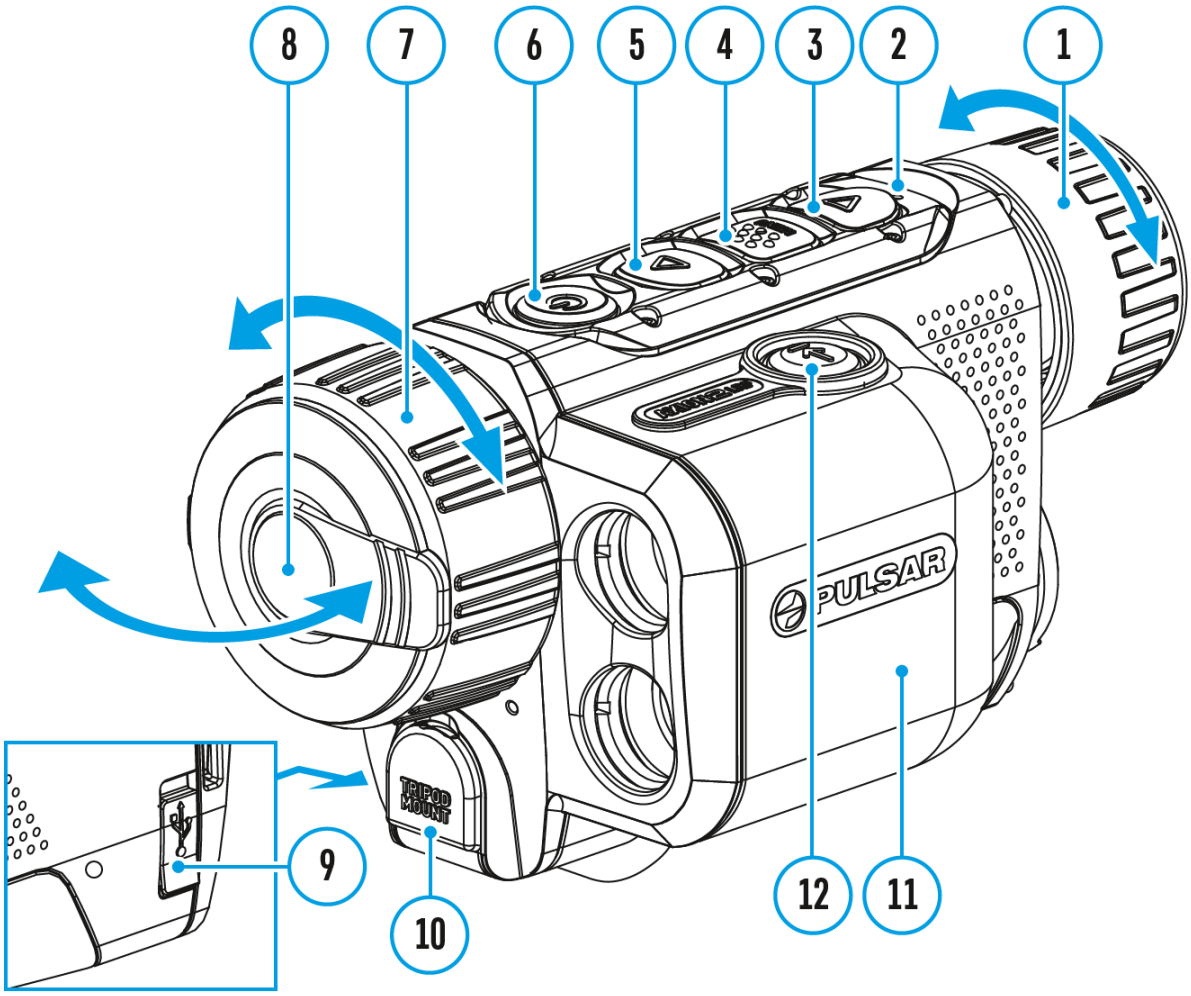

The **Axion 2 LRF**thermal imager is equipped with an integrated laser rangefinder.

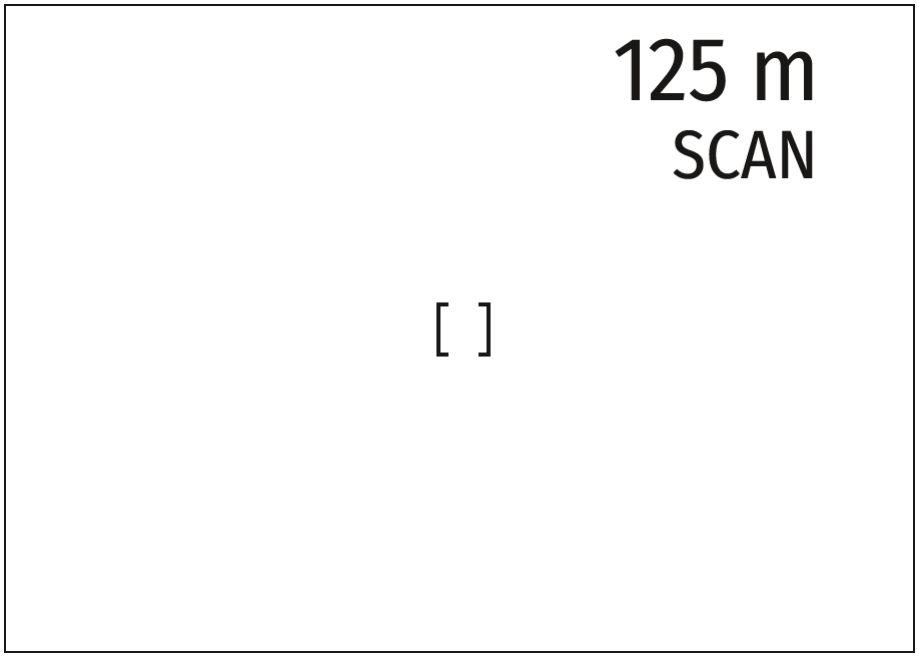

Single Measurement Mode

1. Press the **ON/OFF (6)** button briefly to power the device on.
2. Activate the rangefinder by pressing the **LRF (12)** button briefly. A red mark appears on the display.
3. Place the rangefinder’s reticle on the target. Press the **LRF (12)** button briefly to measure the distance to the object once.
4. The measurement results are displayed in the upper right corner.
5. The rangefinder shuts down after 3 seconds of inactivity.

Scan Mode

1. Press the **ON/OFF (6)** button briefly to power the device on.
2. Activate the rangefinder by pressing the **LRF (12)** button briefly. A red mark appears on the display.
3. Activate the scan mode by long pressing the **LRF (12)** button to continuously measure the distance to objects.
4. The measurement results are displayed in the upper right corner.
5. Deactivate the rangefinder by long pressing the **LRF (12).**

Notes:

- Additional rangefinder settings are available in the **Rangefinder**section of the main menu.

- To select a unit of measurement (meters or yards) go to **Units of Measure** M/Y subsection of the **General Settings** section.
- When you turn on the rangefinder, the **PiP** window turns off.

Additional Information:

- The accuracy and distance of the measurement depends on the reflection coefficient of the object surface and weather conditions. The reflection coefficient depends on the texture, color, size and shape of the object. Generally, lighter colored objects and those with a shiny surface will have a higher reflection coefficient.
- Measurement accuracy can be influenced by the light conditions, fog, haze, rain, snow, etc. The results may be less accurate when operating in sunny weather or if the rangefinder is directed towards the sun.
- It is easier and more reliable to measure the distance to large objects than to small ones.

Discrete Digital Zoom

Show device diagram

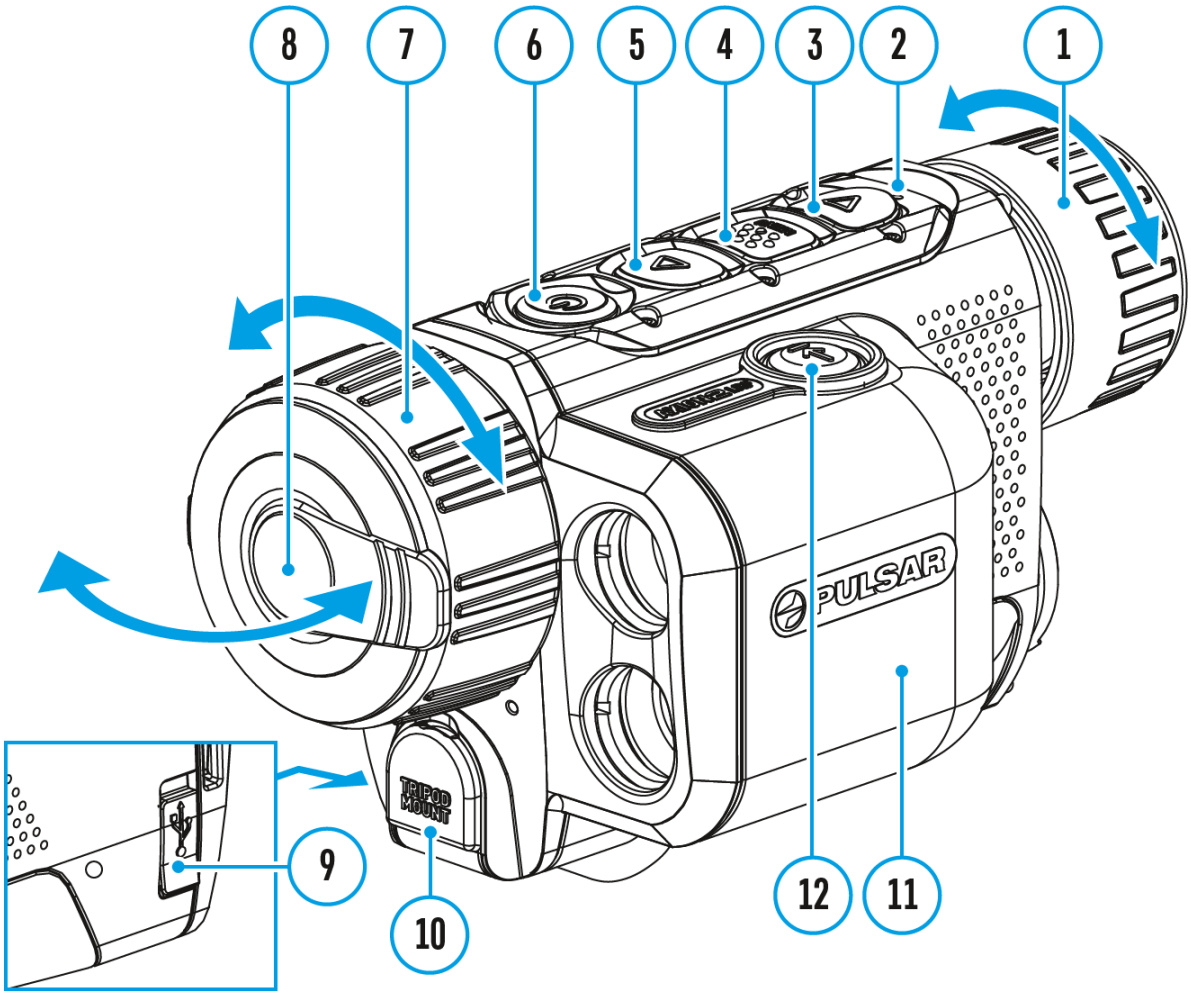

The device functionality allows you to quickly increase the base magnification by 2 or 4 times as well as return to the base magnification.

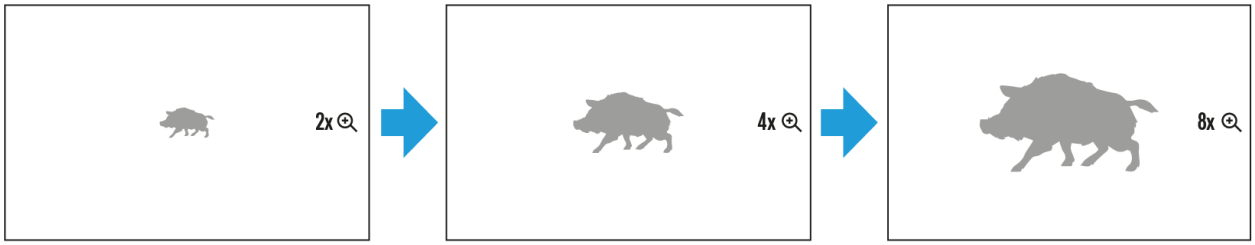

Press and hold the**UP/ZOOM (5)** button to change the digital zoom.

PiP Function

Show device diagram

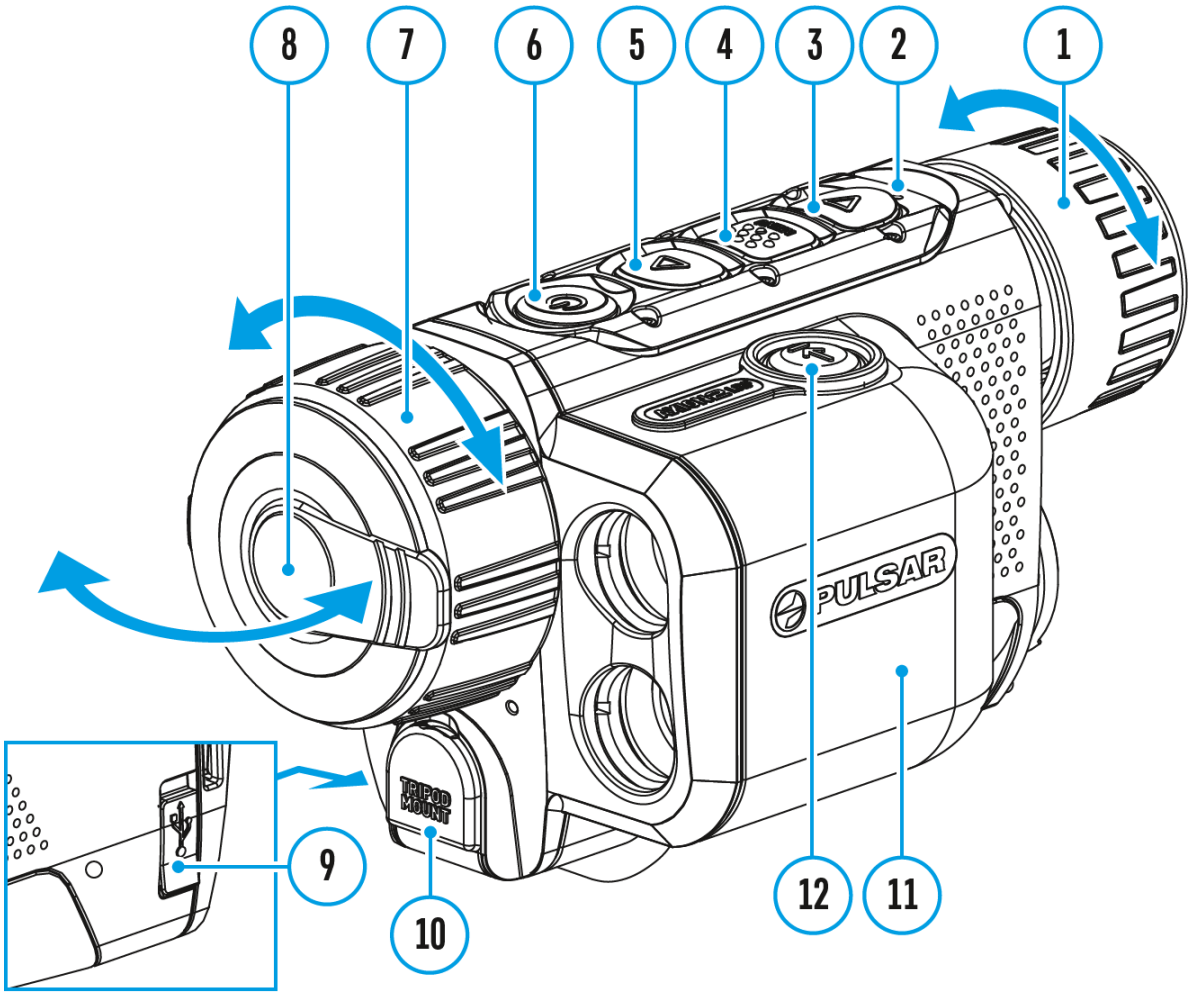

The **PiP** (Picture-in-Picture) function allows you to see both the main image and a magnified image in a dedicated window.

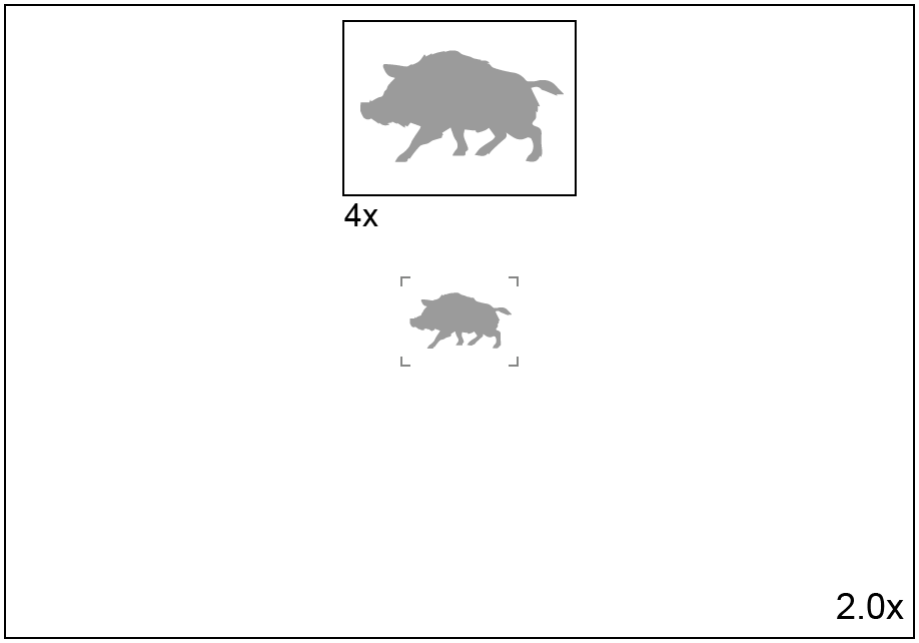

- To turn on and off the **PiP** function see the **PiP Mode** section.
- Press and hold the **UP (5)** button to change the magnification ratio in the **PiP**window.
- The zoomed image is displayed in a dedicated window, while the image in the rest of the screen is displayed at base magnification (2x).
- When the **PiP** is turned on you can control both the discrete and smooth digital zoom. In this case the zoom value changes only take place in the dedicated window.
- When the **PiP** function is turned off, the screen will display at the magnification that was set in **PiP**mode.

Display-Off Function

Show device diagram

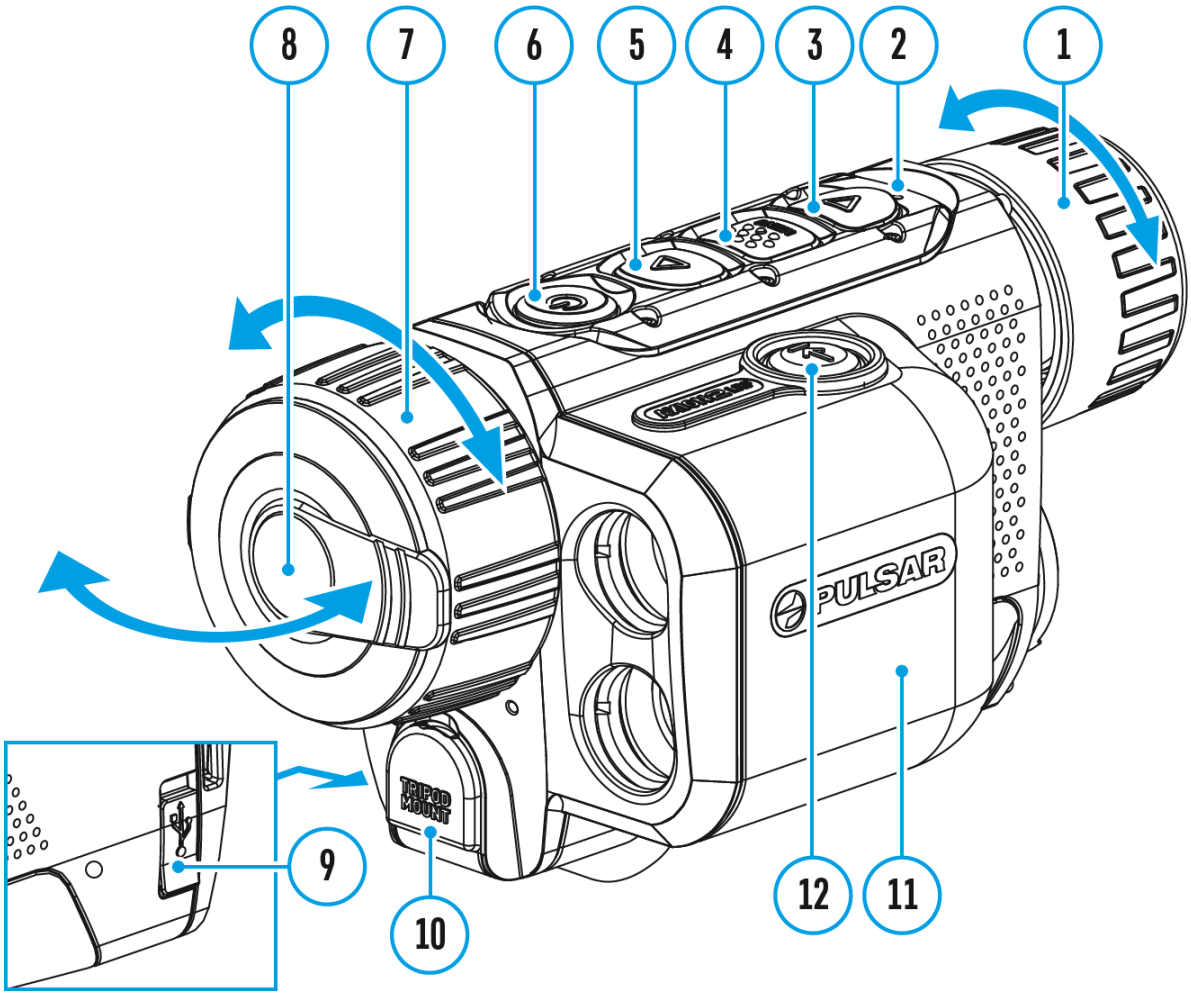

This function deactivates the image transmission to the display by minimizing its brightness. This allows the user to remain unseen. However, the device stays on.

When this function is in use, the device switches to the standby mode, which allows it to be switched on instantly.

00:03

1. When the device is on, press and hold the **ON/OFF (6)** button. The display will turn off, the current time and the **"Display off"**icon will appear.
2. Turn the display back on with a short press of the**ON/OFF (6)** button.
3. When you press and hold the **ON/OFF (6)** button, the display shows the **"Display off"** icon with a countdown. Pressing & holding the button down for the duration of the countdown will power the device off completely.

Wi-Fi Function

The device has a function enabling wireless communication with external devices (smartphone or tablet) via Wi-Fi.

- Turn on the wireless module in the **WI-Fi Activation** menu option.

Wi-Fi is displayed in the status bar as follows:

Indication on the status bar	Connection Status
	Wi-Fi is switched off
	Wi-Fi connection is in progress
	Wi-Fi is switched on, no connection with device
	Wi-Fi is switched on, device connected

- The device is recognized by an external device as AXION2_XXXX where XXXX are the four last digits of the serial number.
- After entering the password on the external device (see **Password Setup** subsection of the **Wi-Fi Settings** section for more information on setting a password) and setting up a connection, the icon in the status bar changes to .

Installing the Device on a Tripod

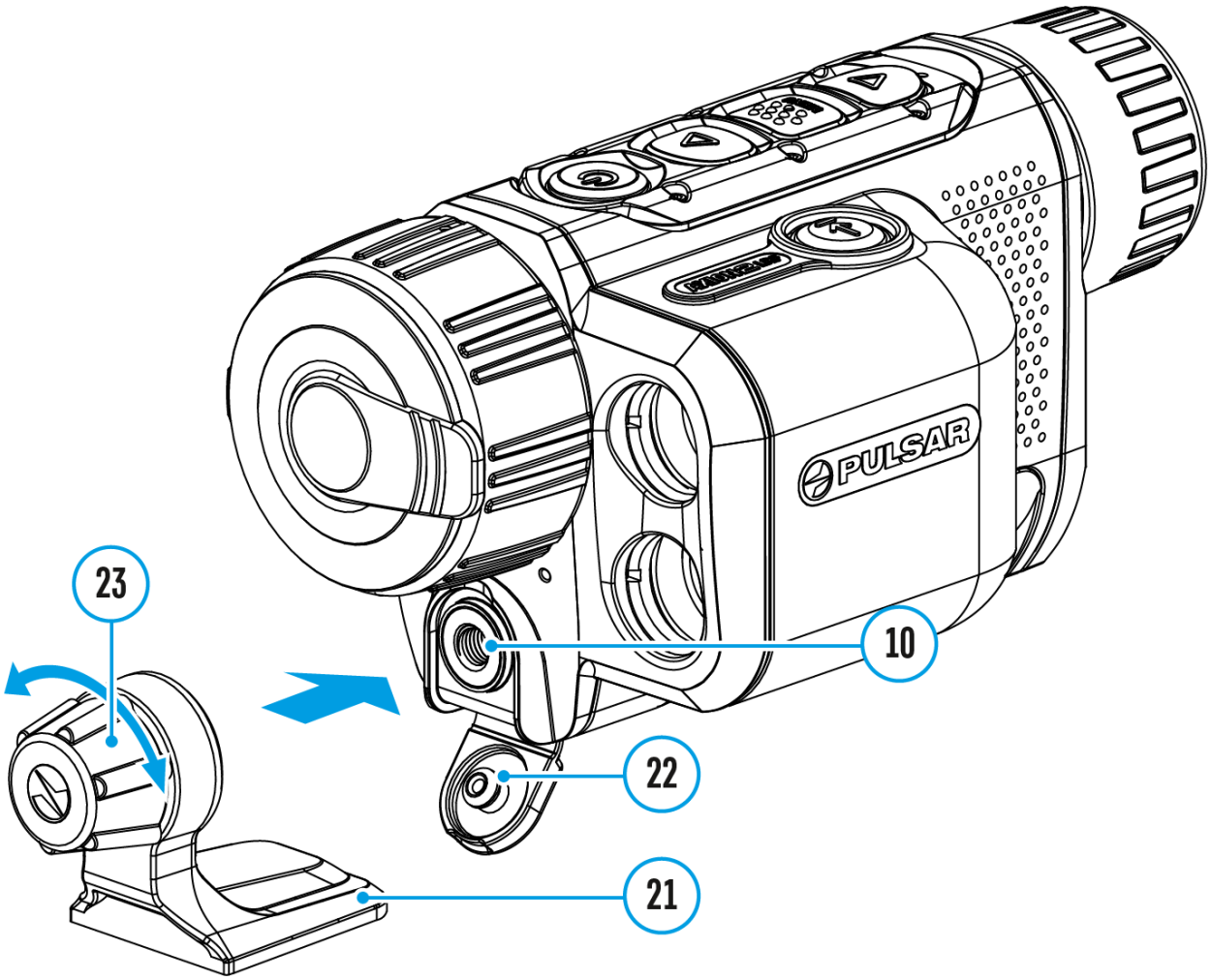

1. Open the cover **(22)** of the socket **(10).**
2. Attach the tripod adaptor **(21)** to the socket **(10).**
3. Rotate the adaptor handle clockwise until it stops.
4. Secure the adaptor with the device on a tripod.

USB Connection

Show device diagram

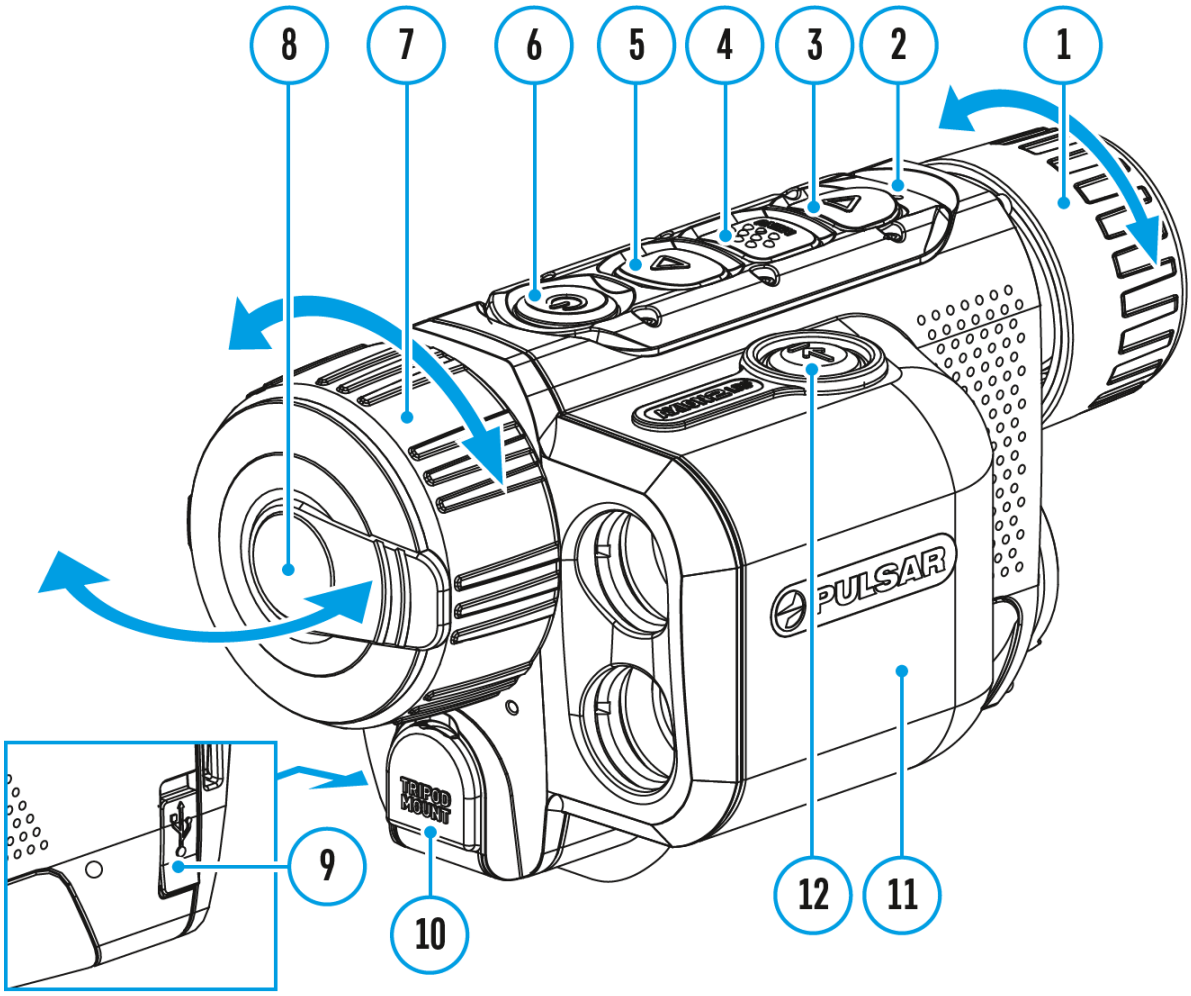

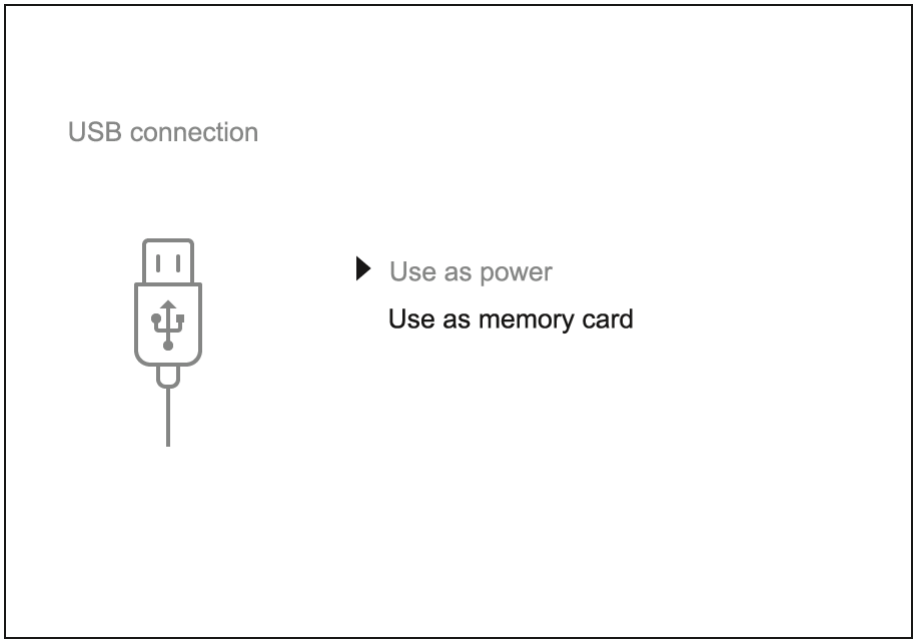

1. Connect one end of the USB cable to the USB Type-C port **(9)** of your device and the other end to the USB port of your PC / laptop.
2. Turn the device on with a short press of the **ON/OFF(6)** button (a device that has been turned off cannot be detected by your computer).
3. Your device will be detected by the computer automatically; no drivers need to be installed.
4. Two connection modes will appear on the display: **Power** and **Memory Card**(external storage device).
5. Select the connection mode with the **UP (5)/DOWN (3)** buttons.
6. Confirm the selection with a short press of the **MENU (4)** button.

Power

- In this mode, a PC/laptop is used as an external power supply. The status bar shows the icon ▬■=. The device continues operating and all functions are available.
- Battery recharge feasibility depends on your computer's USB port.
- When the USB is disconnected from the device when in the **Power** mode, the device keeps operating with the Battery Pack if it is available and sufficiently charged.

Memory Card (external memory)

- In this mode the device is detected by the computer as a flash card. This

mode is designed for work with the files saved in the device's memory. The device's functions are not available in this mode; the device turns off automatically.

- If video recording was in progress when the connection was made, recording stops and the video is saved.
- When the USB is disconnected from the device where connection is in the **Memory Card** mode, the device remains in the Off state. Turn the device On for further operation.

Stream Vision 2

Install the Stream Vision 2 application to download files, update firmware, control the device by remote control and broadcast images from your device to a smartphone or a tablet via WiFi.

We recommend using the latest version – Stream Vision 2.

Mobile App
STREAM VISION 2

You can find further guidelines on Stream Vision 2 **here.**

Download from Google Play

Download from App Store

Find answers to frequently asked questions about using Stream Vision 2 **here**.

Firmware Update

1. Download free Stream Vision 2 App in Google Play or App Store.
2. Connect your Pulsar device to your mobile device (smartphone or tablet).
3. Launch Stream Vision 2 and go to section “Settings”.
4. Select your Pulsar device and press “Check firmware update”.
5. Wait for the update to download and install. Pulsar device will reboot and will be ready to operate.

Important:

- if your Pulsar device is connected to phone, please turn on mobile data transfer (GPRS/3G/4G) to download update;
- if your Pulsar device is not connected to your phone but is already listed in “Settings” > “My devices” section, you may use Wi-Fi to download update.

Find answers to frequently asked questions about using Stream Vision 2 **here**.

Technical Inspection

It is recommended to carry out a technical inspection before each use of the device. Check the following:

- The device appearance (there should be no cracks on the body).
- The state of the objective, eyepiece and rangefinder lenses (there should be no cracks, grease spots, dirt or other deposits).
- The state of the rechargeable battery (should be charged) and the electric contacts (should be no signs of salts, oxidation or debris).
- The controls should be in working order.

Technical Maintenance and Storage

Maintenance should be carried out at least twice a year and include the following steps:

- Wipe the exterior metal and plastic surfaces with a cotton cloth to remove dust and dirt. To avoid damage to the paint coating, do not use chemically active substances, solvents, etc.
- Clean the electrical contacts of the rechargeable battery on the device using a non-greasy organic solvent.
- Check lenses of objective, eyepiece and rangefinder. If necessary, remove the particles of dust and sand (preferably using a non-contact method). Cleaning of the exterior surfaces of the optics should only be done with products specifically designed for this purpose.
- Store the device in a carrying case. Remove the Battery Pack for long-term storage.

Troubleshooting

The device does not turn on

Possible cause

The battery is completely discharged.

Solution

Charge the battery.

The device does not operate from an external power source

Possible cause

The USB cable is damaged.

Solution

Replace the USB cable.

Possible cause

The external power supply is discharged.

Solution

Charge the external power supply (if necessary).

The image is blurry, with vertical stripes or an uneven background

Possible cause

Calibration is required.

Solution

Perform image calibration according to the **Calibration Mode** section of the manual.

Black screen after calibration

Solution

If the image does not clear after calibration, you need to recalibrate.

Poor quality image. There is noise or ghost images of previous scenes or objects

Possible cause

Manual calibration has been performed with the lens cover open.

Solution

Check the**Calibration Mode**, close the lens cover and calibrate the device.

Image is too dark

Possible cause

Brightness or contrast level is too low.

Solution

Adjust the brightness or contrast level in the **Quick Menu.**

Color bars appear on the display or the image disappears

Possible cause

The device was exposed to static charges during operation.

Solution

When the exposure to static charges is over, the device may either reboot automatically or require to be switched off and on again.

The image of the object being observed is missing

Possible cause

You are looking through glass.

Solution

Remove the glass or change the viewing position to avoid it.

Poor image quality / Detection range reduced

Possible cause

These problems may occur during observation in adverse weather conditions (snow, rain, fog, etc.).

The image quality during the device operation at below zero temperatures is worse than at positive temperatures

Possible cause

In positive temperature conditions, objects being observed (surroundings and background) heat up differently because of thermal conductivity, thereby generating a high temperature contrast. Consequently, the image quality produced by the thermal imager will be better.

In low-temperature conditions, objects being observed (background) will cool down to roughly the same temperature, which leads to a greatly reduced temperature contrast and a degraded image quality. This is normal for all thermal imaging devices.

Smartphone or tablet PC cannot be connected to the device

Possible cause

Device password has been changed.

Solution

Delete the network and connect again using the password saved in the device.

Possible cause

The device is in an area with too many Wi-Fi networks that may be causing signal interference.

Solution

To ensure a stable Wi-Fi connection, relocate the device to an area with fewer or no Wi-Fi networks.

Possible cause

The device has a 5 GHz network enabled, but the smartphone only supports 2.4 GHz.

Solution

Switch the device's Wi-Fi bandwidth to 2.4 GHz.

More information on solving problems with connection to Stream Vision 2 by following the **link**.

Wi-Fi signal is missing or interrupted

Possible cause

Smartphone or tablet is out of range of a strong Wi-Fi signal. There are obstacles between the device and the smartphone or tablet (e.g., concrete walls).

Solution

Relocate smartphone or tablet into the Wi-Fi signal line of sight.

More information on solving problems with connection to Stream Vision 2 by following the **link**.

Rangefinder does not measure distance

Possible cause

There is an object in front of the receiver or emitter lens preventing signal transmission.

Solution

Make sure that: the lenses are not blocked by your hand or fingers; the lenses are clean.

Possible cause

The device is not being held steadily when measuring.

Solution

Do not stress the device when measuring.

Possible cause

Distance to the object exceeds 1000 m.

Solution

Pick an object at a distance not longer than 1000m.

Possible cause

Low reflection ratio (i.e. leaves of trees).

Solution

Pick an object with higher reflection ratio (see point **Additional Information**in section **Laser Rangefinder**).

Large measurement error

Possible cause

Inclement weather conditions (rain, mist, snow)

Specifications

XQ35

Model	XQ35
SKU	77479
Microbolometer	
Type	uncooled
Resolution, Pixels	384x288
Pixel Pitch, µm	17
Frame Rate, Hz	50
Optical Characteristics	
Optical Magnification, x	2
Smooth Digital Zoom	2-8
Digital Zoom, x	x1, x2, x4
Lens Focus, mm	35
Relative Aperture, D/f'	1.0
Minimum Focus Distance, m/y	5 / 5.47
Eye Relief Diameter, mm/inch	4 / 0.16
Angular Field of View (Horizontal x Vertical), degree	10.7x8
Linear Field of View, m at 100 m	18.2
Eyepiece Focus Range, Diopter	+4 / -5
Detection Distance for Deer-Sized Objects, m/y	1300 / 1422

Display	
Type	AMOLED
Resolution, Pixels	640x400
Operational Characteristics	
Power Supply, V	3 - 4.2
Battery Type/Capacity/Nominal Output Voltage	APS 5 Li-ion Battery Pack / 4900 mAh / DC 3.7 V
External Power Supply	5 V, 9 V (USB Type-C)
Battery Run Time at t=22°C, hours*	11
Degree of Protection, IP Code (IEC60529)	IPX7
Operating Temperature Range, °C / °F	-25 … +40 / -13 – +104
Dimensions, mm/inch	152x74x75 / 5.98x2.91x2.95
Weight (without battery), kg/oz	0.35 / 12.34
Video Recorder	
Photo/Video Resolution, Pixels	528x400
Video/Photo Format	.mp4 / .jpg
Built-in Memory	16 GB
Wi-Fi Channel**	
Frequency	2.4/5 GHz
Standard	IEEE 802.11 b/g/n/ac
Characteristics of the Rangefinder	
Wavelength, nm	905
Measurement Range, m/y***	1000/1094

Measurement Accuracy, m	1

* Actual battery life may vary depending on the use of Wi-Fi and the built-in video recorder.

** Reception range may vary depending on various factors: obstacles, other Wi-Fi networks.

*** Depends on the characteristics of the object under observation and environmental conditions.

XG35

Model	XG35
SKU	77477
Microbolometer	
Type	uncooled
Resolution, Pixels	640x480
Pixel Pitch, µm	12
Frame Rate, Hz	50
Optical Characteristics	
Optical Magnification, x	2.5
Smooth Digital Zoom	2.5-20
Digital Zoom, x	x1, x2, x4, x8
Lens Focus, mm	35
Relative Aperture, D/f'	1.0
Minimum Focus Distance, m/y	5 / 5.5
Eye Relief Diameter, mm/inch	4 / 0.16
Angular Field of View (Horizontal x Vertical), degree	12.5x9.4
Linear Field of View, m at 100 m	21.9
Eyepiece Focus Range, Diopter	+4 / -5
Detection Distance for Deer-Sized Objects, m/y	1750 / 1914
Display	
Type	AMOLED
Resolution, Pixels	1024x768
Operational Characteristics	
Power Supply, V	3 - 4.2

Battery Type/Capacity/Nominal Output Voltage	APS 5 Li-ion Battery Pack / 4900 mAh / DC 3.7 V
External Power Supply	5 V, 9 V (USB Type-C)
Battery Run Time at t=22°C, hours*	7
Degree of Protection, IP Code (IEC60529)	IPX7
Operating Temperature Range, °C / °F	-25 … +40 / -13 – +104
Dimensions, mm/inch	152x74x75 / 5.98x2.91x2.95
Weight (without battery), kg/oz	0.35 / 12.34
Video Recorder	
Photo/Video Resolution, Pixels	1024x768
Video/Photo Format	.mp4 / .jpg
Built-in Memory	16 GB
Wi-Fi Channel**	
Frequency	2.4/5 GHz
Standard	IEEE 802.11 b/g/n/ac
Characteristics of the Rangefinder	
Wavelength, nm	905
Measurement Range, m/y***	1000/1094
Measurement Accuracy, m	1

* Actual battery life may vary depending on the use of Wi-Fi and the built-in video recorder.

** Reception range may vary depending on various factors: obstacles, other Wi-Fi networks.

*** Depends on the characteristics of the object under observation and environmental conditions.

Legal Compliances and Disclaimers

Attention! A license is required for Axion Thermal Imager when exporting outside your country.

Electromagnetic compatibility. This product complies with the requirements of European standard EN 55032: 2015, Class A.

Warning!Operation of this equipment in a residential environment could cause radio interference.

Caution – use of controls or adjustments or performance of procedures other than those specified herein may result in hazardous radiation exposure.

This product is subject to change in line with improvements to its design.

Repair of the device is possible within 5 years.